This Informationen is intended for Europa (230 V / 240 V) only and cannot be applied for North America

SEBO
MADE IN GERMANY

SEBO AUTOMATIC XP 30

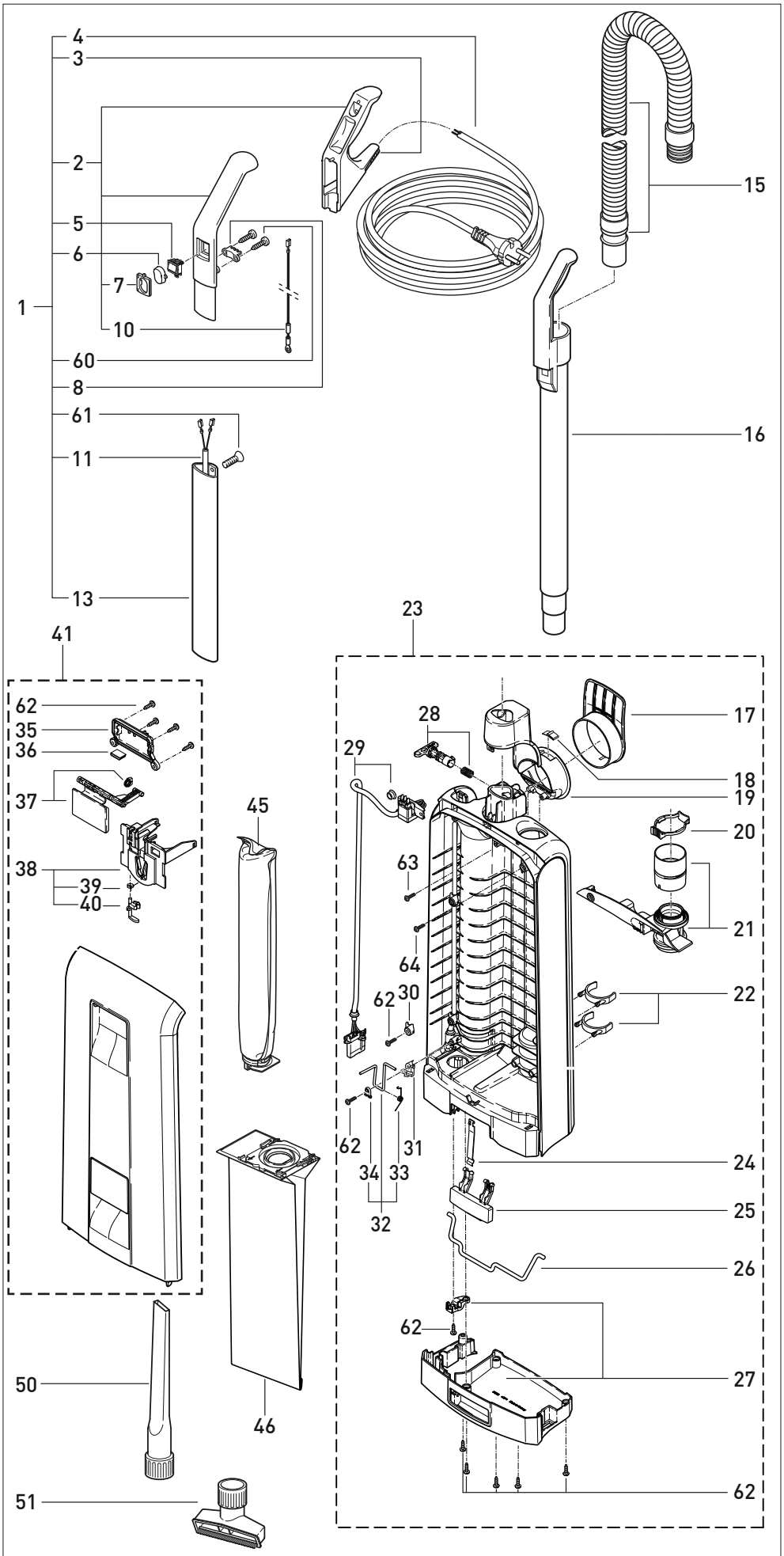

Pos.	Art.-Nr.	Benennung (DE)
1	50628SE	Handle with cable, cpl.
2	5296ES	Handle grip, (incl. Pos. 7 + 10), light grey
3	5359HG	Grommet, light grey
4	5260or	Cable, Contour plug, orange
5	05113	Switch
6	5160gs	Switch cap, grey black
7	5161hg	Switch cap holder, light grey
8	5162	Cable clamp
10	5253-1	Wire antistatic
11	5216ER	Handle cable
13	5187	Handle tube
15	5040sb	Hose
16	5045hg	Extension tube without hose, light grey
17	51108hg	Cable hook, light grey, spare part
18	5146	Stop spring
19	51109hg	Carrying handle,light grey, spare part
20	5424gs	Retaining ring, grey black
21	51115hg	Internal cover, cpl., light grey
22	1823hg	Attachment clip, light grey
23	51200HG	Dust bag housing, cpl., light grey/grey black
24	5084	Spring for locking rod
25	51103gs	Dust bag housing locking catch, grey black
26	5083	Locking rod
27	51102hg	Dust bag housing bumper base, light grey
28	51110ER	Lock catch incl. Spring, grey black
29	51118	Internal cable
30	5164	Cable clamp
31	5266	Cable clamp
32	5208	Filter safety catch
33	5210	Return spring
34	1073	Clamp
35	51159gs	Cover, grey black
36	5319	Bag holder spring
37	51153GS	Cover release XP 2017, grey black
38	1847	Bag holder, cpl.(incl. Pos. 39 + 40)
39	5091	Safety catch spring
40	1817	Safety catch
41	51151hg	Front cover, cpl., light grey / grey black
45	5036ER	Micro hygiene filter
46	5093N	Paper bag (packed in 10)
50	1092JE	Crevice nozzle
51	1491JE	Upholstery nozzle
60	0103ER	Screw C 3,9x15
61	0129ER	Screw M4x12
62	01036ER	AMTEC-Screw 4x13 Tx 20
63	01036SW	AMTEC-Screw 4x13 Tx 20 black
64	01047ER	AMTEC-Screw 3x12 Tx 10 black

Art.-No. 06681M, 05/2018

This Informationen is intended for Europa (230 V / 240 V) only and cannot be applied for North America

SEBO
MADE IN GERMANY

SEBO AUTOMATIC XP 30

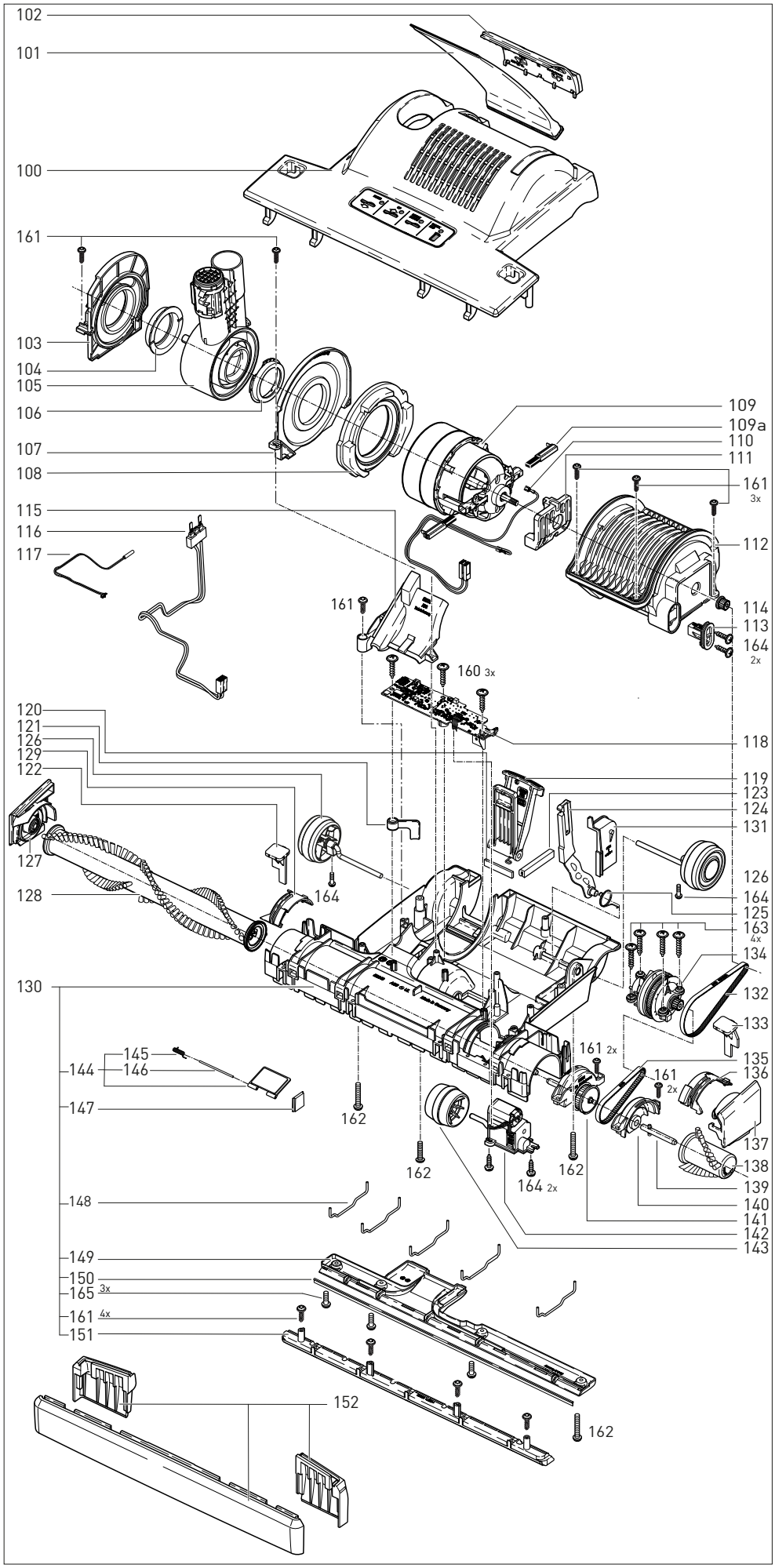

Pos.	Art.-Nr.	Benennung (DE)
100	52125GS	Power head cover cpl., grey black
101	52038ER	Exhaust Filter X-2017
102	52114GS	Cover exhaust filter, grey black
103	52108ER	Swivel neck bearing right
104	5101	Swivel neck support right
105	52023ER	Swivel neck assembly
106	5717	Swivel neck bearing left
107	52020	Swivel neck support left
108	52014	Motor support gasket, AMETEK
109	52113ER	Vacuum motor, 890 W/220-240 V, incl. cable
109a	05140S	Carbon brush vac motor
110	52040ER	Cabling Motor
111	50382	Rubber mounting, AMETEK
112	52012	Motor cover
113	52011ER	Belt tightener
114	5462	Motor pulley
115	52115ER	Cover for air channel
116	52199ER	Cabling swivel neck
117	52103	Reed-Switch swivel neck
118	5871ER	PCB power supply / controller
119	52009OR	Foot pedal
120	52052	Felt strip
121	52054	Cable guide
122	52250gs	Brush roller release button, r.h., grey black
123	52112	Motor cover support
124	52021	Support lever
125	5107-1	Support spring
126	52102HG	Wheel with axle
127	52135HG	Bearing block right hand
128	5276ER	Brush roller set (incl. Pos. 138)
129	52236ER	Release ring brush roller, r.h.
130	52127HG	Chassis, cpl., w/o bumper
131	5112sw	Motor pulley cover
132	5463	Belt 2MR-310-6
133	52249gs	Brush roller release button, l.h., grey black
134	52198ER	Sensor X8/XP 20/XP 30
135	5110	Belt 219 3M-HDTII-6
136	52248ER	Release ring brush roller, l.h.
137	52133hg	Brush cover l.h., light grey
138	5815	Edge Brush XP 20/30, blue
139	5237	Shaft extension
140	52131	Sealed bearing
141	52121	Bearing block , left hand, cpl.
142	5060ER	Servo motor with gear box with connecting cable 135mm
143	5174hg	Pile adjustment wheel
144	5172OR	Access door (incl. Pos. 145 + 146)
145	5304	Access door spring
146	5303	Access door axle
147	5155hg	Rubbing plate
148	52244hg	Wire tie
149	5402	Rear bottom plate, cpl. (incl. Pos. 150 + 165)
150	52130HG	Sealing strip
151	5400-3	Front bottom plate, cpl.
152	52128HG	Bumper XP 30, light grey
160	01029ER	Screw C 2,9x16
161	01016ER	AMTEC-Screw 4,0x16 Tx20
162	0176ER	Screw M4x30
163	0104ER	Screw C 3,9x25
164	0102ER	Screw 3,9x13
165	0197ER	Screw M4x12 Z1