This information intended only for Europe (230 V / 240 V) and does not apply to North America!

dark blue

SEBO
MADE IN GERMANY

SEBO AIRBELT D3 FAMILY

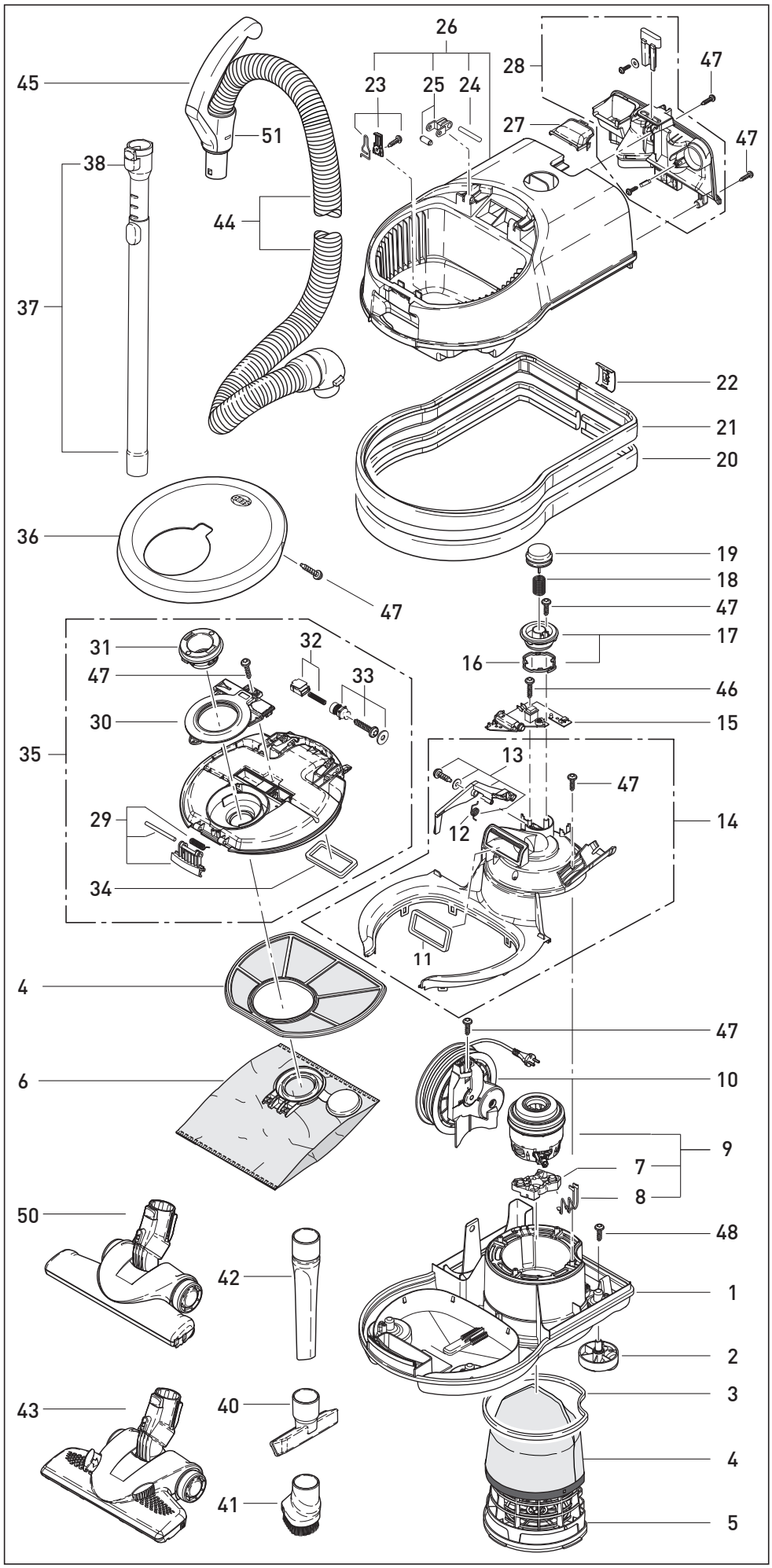

Pos.	Part.-No.	Description
1	8001dbER	Bottom casing
2	8086gs	Castor cpl.
3	8065ER	Exhaust filter seal
4	8191ER	Micro filer box D
5	8084ER	Filter holder
6	8120ER	SEBO-Filterbox D
7	8045ER	Motor support
8	8090ER	Internal cable set
9	8047ER	Vacuum motor 220 - 240V,1900W cpl.
10	665611E	Cable rewind unit 12m contour plug
11	8009	Motor inlet seal
12	8098ER	Rewind lever spring
13	8036ER	Rewind lever cpl.
14	8085ER	Motor cover cpl.
15	8101ER	Printed Circuit board
16	8058ER	Retaining ring
17	8038ER2	Power display overprinted
18	8057	Spring
19	8202gs	Power knob
20	6047ER10	AIR BELT, Stripes
21	8033UL	Foam bumper
22	8034gs	Air Belt clip
23	8140ER	Filter bag spring
24	6750ER	Cover Axle
25	8052ER	Cover Hinge
26	8003dbER	Top casing
27	8059gs	Cable entry
28	8010gsER	Attachment holder
29	8114ER	Cover release
30	8129gs	Cover insert
31	8078gs	Hose neck
32	7020ER	Bag indicator
33	8127ER	Bag indicator adjuster
34	8130	Cover seal
35	8051ER1	Inside cover cpl.
36	8005dbE4	Cover
37	6237ER	Telescopic tube stainless steel
38	1735ER	Release button cpl.
40	8142gs	Upholstery nozzle
41	8146ER	Dusting brush
42	8066gs	Crevice nozzle
43	7260GS	SEBO Combination head
44	8169gs	Hose with end couplings incl. handle
45	6300gs	Handle grip cpl.
46	01000ER	Screw 2,9x16
47	01036ER	Screw 4 x14
48	0102ER	Screw 3,9x13
50	7200GS	SEBO PARQUET
51	6303gs	Retaining ring

Art.-No 06325W1 - 06/2013